6 DEALER MANUAL FOR M410 (MM G333.250.C)

CONTENT

6.1 INTRODUCTION

- **Product Model**

  MM G333.250.C

- **Scope of Application**

Only apply to electric powered bicycles, and specifically designed or licensed for pedelec. It is suitable for mountain bikes. It should not be used for competition or other commercial purposes.

- **Identification**

There are the unique identification of the product on the housing, as shown in figure:

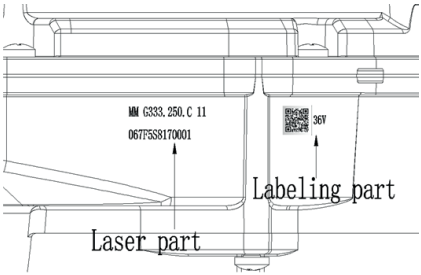

Note: Contents in Label part are important information of this product. Please keep them properly for updating of software or providing after-sales service.

6.2 SPECIFICATIONS

① Motor model: MM G333.250.C

Rated power (W)	250
Rated voltage (V)	36 / 43 / 48
Waterproof	IP65
Certification	CE / ROHS / EN14766
Outdoor Temperatures	-20℃~45℃

6.2.1 Outline and geometric size

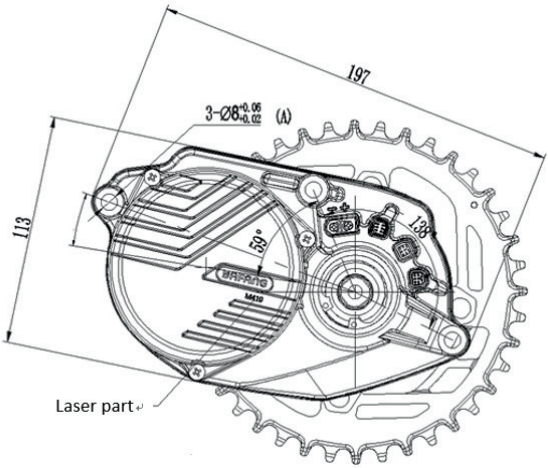

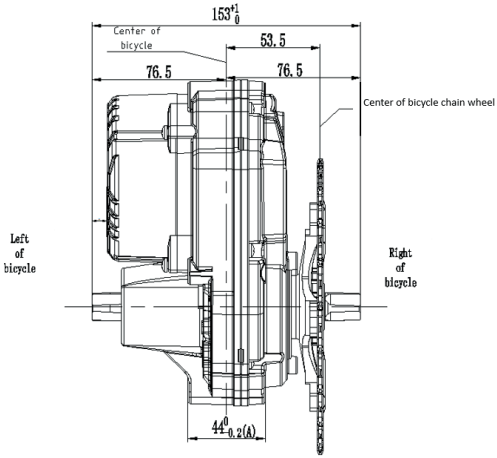

Chain line(CL): 53.5 mm

Shaft standard: BAFANG

6.2.2 Surface

Shockproof black coating

6.2.3 Storage Information

The pedelec should be stored in a ventilated humid and dry room. Avoid storing the pedelec near strong magnetic objects.

6.3 DRIVE UNIT INSTALLATION

6.3.1 List of Tools to be used

Do not use impact wrenches.

Use of the Tools	Tools
To fasten screws onto the frame interface and the drive unit To fasten screws on the crank To mount the bash guard and cover	Internal hex wrench
To fasten screws on the motor cover and cable cover	T10 Torx screw driver
To lock and loosen the lock nuts on the chain wheel	BAFANG tool
To fasten nuts onto the frame interface and the drive unit	Socket spanner (BAFANG: diameter=17.7mm, length=63mm) (OTHER: diameter <20mm, length >35mm)
To connect the cabling	BAFANG tool

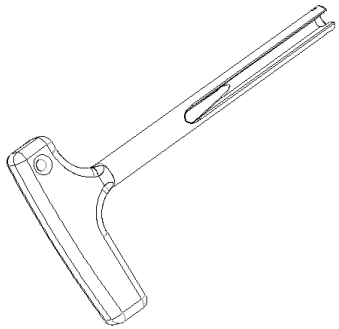

BAFANG tool

6.3.2 Install Drive Unit to Connection Interface

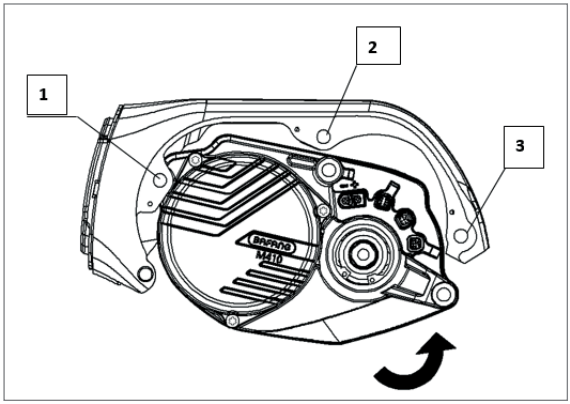

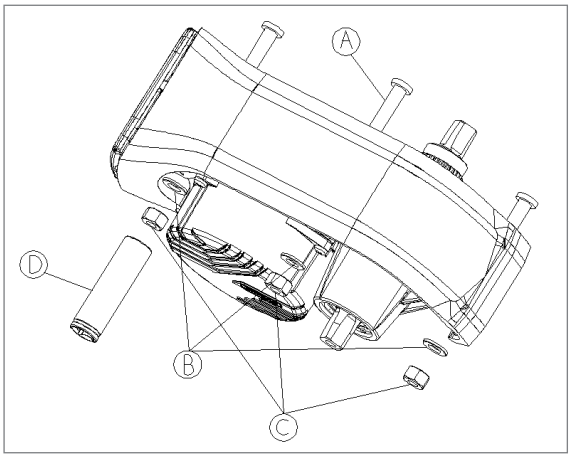

- A M8 bolt
- B M8 flat washer
- C M8 lock nut
- D Tool-socket spanner

Steps:

1) Align the Hole 1 on the frame interface with the mounting hole on the motor.

2) Rotate the motor anticlockwise around Hole 1, and align the Hole 2 and Hole 3.

3) Fasten 3 M8 bolts into Hole 1, 2, 3 from the right side to the left side.

4) Fasten the 3 M8 lock nuts with flat washers on the left of the frame, with tightening torque at 35 N.m.

6.3.3 Cabling

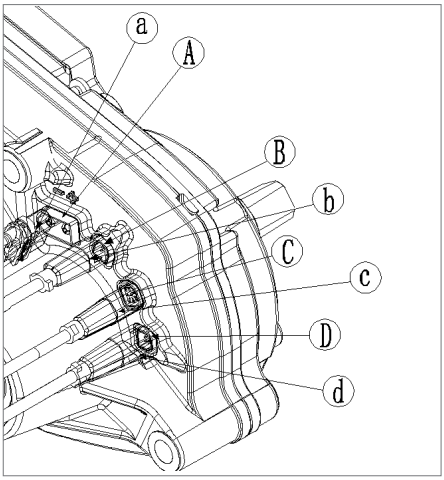

- A Male connector for power supply at the drive unit
- a Female connector for power supply at the battery
- B Male connector (6 pin) at the drive unit
- b Female connector (6 pin) for other device
- C Female connector (8 pin) at the drive unit
- c Male connector (8 pin) rear BUS cable
- D Male connector (8 pin) at the drive unit
- d Female connector (8 pin) at the front BUS cable

Steps:

1) Link the female connector (8 pin) for EB-BUS “d” to the male connector (8 pin) at the drive unit “D”.

2) Link the male connector (8 pin) for EB-BUS “c” to the female connector (8 pin) at the drive unit “C”.

3) Link the power connectors together.

Note: Whether link 6 pin EB-BUS to drive unit is based on customer functional requirements.

6.3.4 Cable connector and method of using BAFANG tool

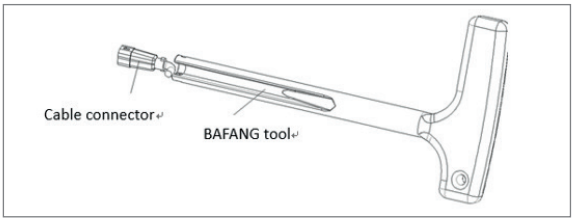

Steps:

1) Hold the cable connector with left hand.

2) Insert BAFANG tool into the bottom of the cable connector with right hand.

3) Insert BAFANG tool clockwise to make both fit together tightly.

4) Insert the unit into the corresponding position at the drive unit.

5) After inserting it into place, turn BAFANG tool counterclockwise and take it out.

6.3.5 Bash Guard and Cover Installation

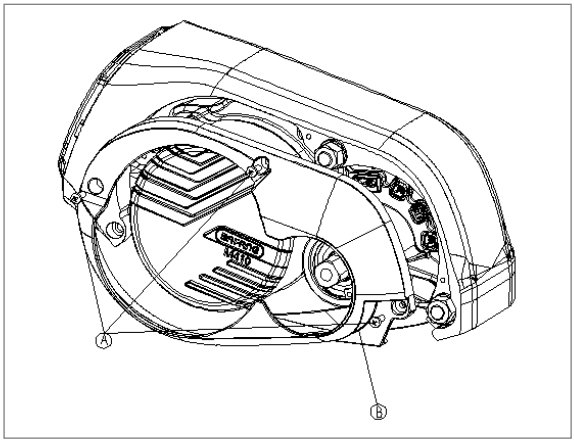

A Hexalobular socket pan head screw M3*8

B Cover

Use a T10 Torx screw driver to tighten 3 M3*8 screws through hole sites on the covering case to the frame interface, with tightening torque at 1 N.m.

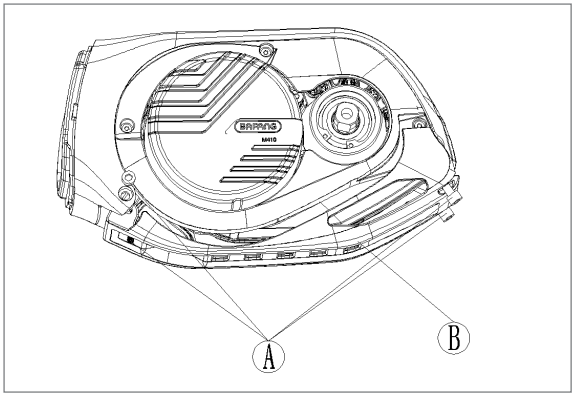

A Hexagonal socket head cap screw M5*8

B Bash guard

Use an internal hex wrench to tighten 4 M5*8 screws through hole sites on the bash guard to the frame interface, with tightening torque at 4 N.m.

6.3.6 Chain Wheel Installation

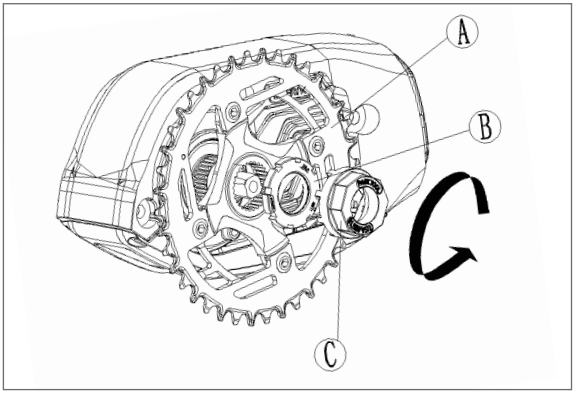

- A Chain wheel (Chain wheel shall be made according to orders of the customers)
- B Lock ring
- C BAFANG tool

1) Put the chain wheel onto the spline shaft of the drive unit.

2) Use BAFANG tool to fasten the lock ring onto the spline shaft, with tightening torque at 35 N.m.

6.3.7 Crank Installation

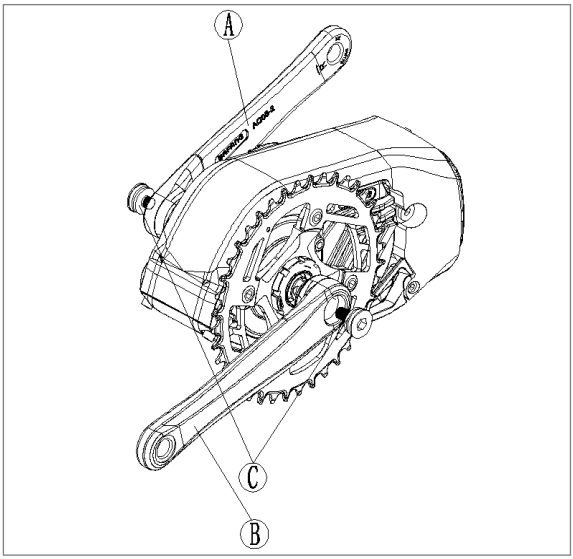

- A Left crank
- B Right crank
- C Hexagon socket screw M8*P1*15

1) After mounting the right crank on the right shaft.

2) Alternately fasten 2 M8*P1*15 screws with an internal hex wrench. (Note: Do not fasten them from one side at a time.) Torque is 1.5 N.m.

3) Install the left crank in the same way. (Note: Please make sure two cranks are parallel.)

6.3.8 External Speed Sensor Installation

① Model: SR SD021.01

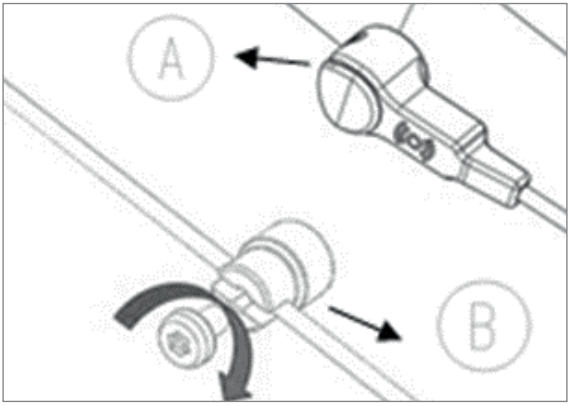

A Speed sensor

B Magnet for the speed sensor

1) Fasten the mounting screws through the speed sensor with a cross screwdriver.

2) Tighten the speed sensor onto the frame.

3) Place the rubber seal on the speed sensor hiding the screw. Torque requirement: 1.5 N.m- 2 N.m.

(Note: Place make sure the gap between the speed sensor and the magnetic unit is between 10 and 20 mm.)

② Model: SR SD051.02

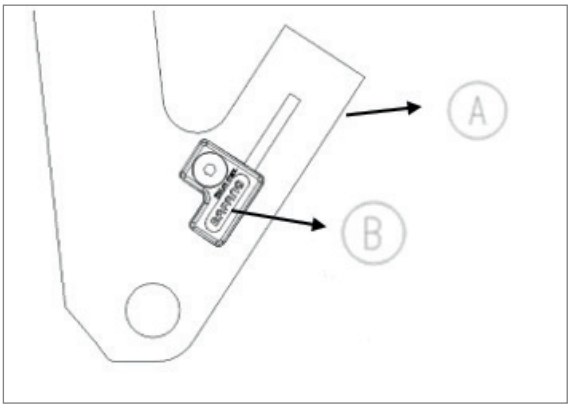

A Rear flat fork

B Speed sensor

1) Place the sensor in the mounting area of the rear flat fork.

2) Tighten the M5*12 countersunk head plum screw clockwise, and install the plug. (Torque: 3N.m.)

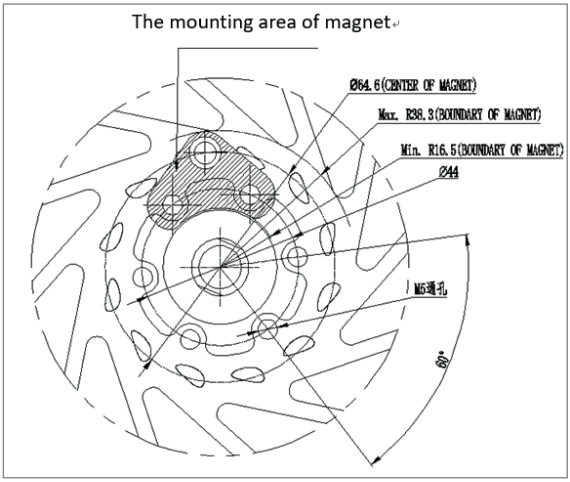

3) Install the magnet on the disc brake, and use a screwdriver to tighten 2 M5*12 countersunk head plum screws. (Torque: 3 N•m.)

6.4 MAINTENANCE

- Maintenance must be carried out by authorized personnel with the correct equipment.
- Do not disassemble the motor.
- Do not use thinners or other solvents to clean the components. Such substances can damage the surfaces.
- Avoid water submerging, to keep the components protected.
- Avoid using high-pressure cleaning jets.
- For prolonged storage, turn off the battery and avoid storing near heat sources.